slalom
acoustic & partition systems

ECOround

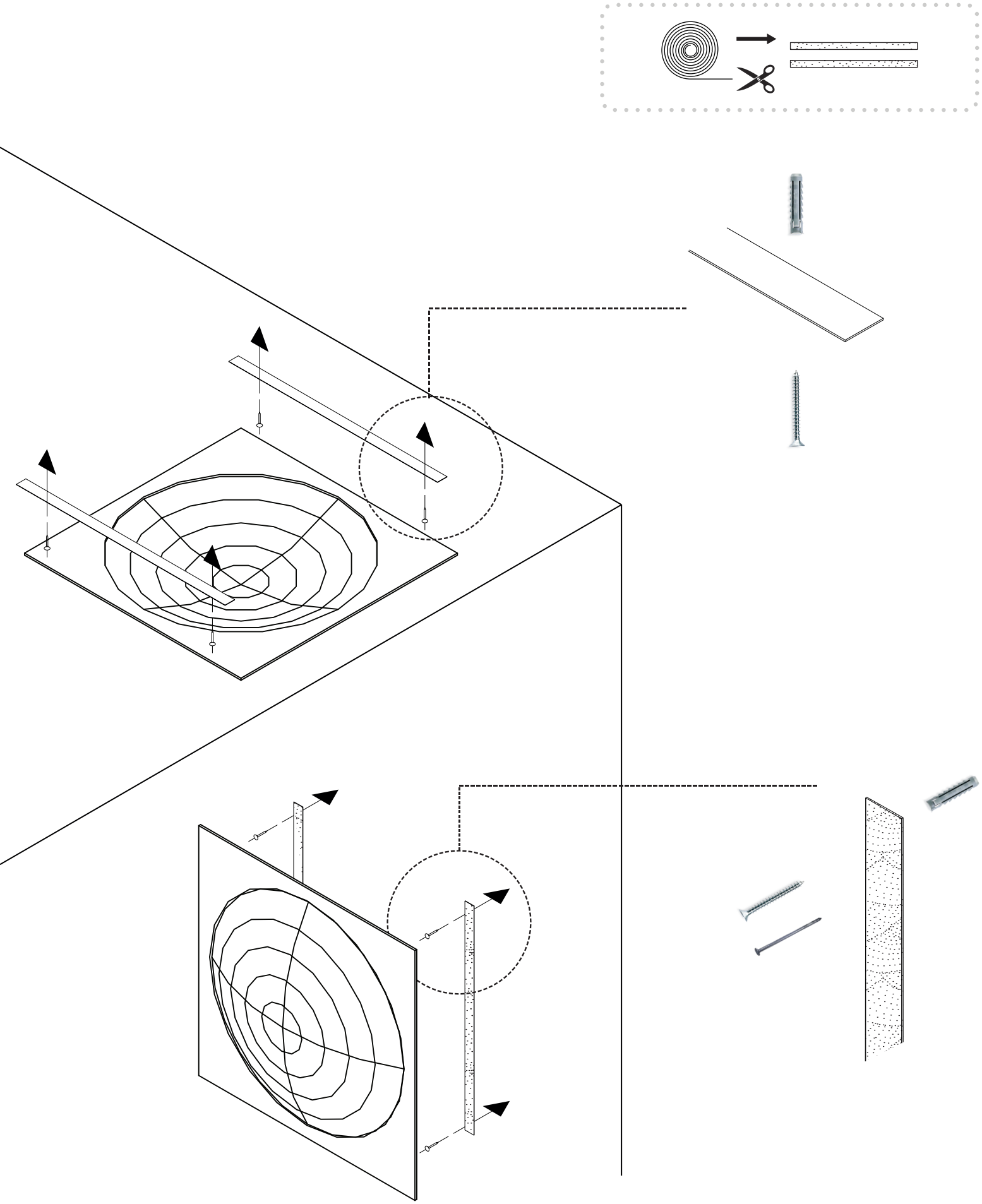

slalom
acoustic & partition systems

ECOround

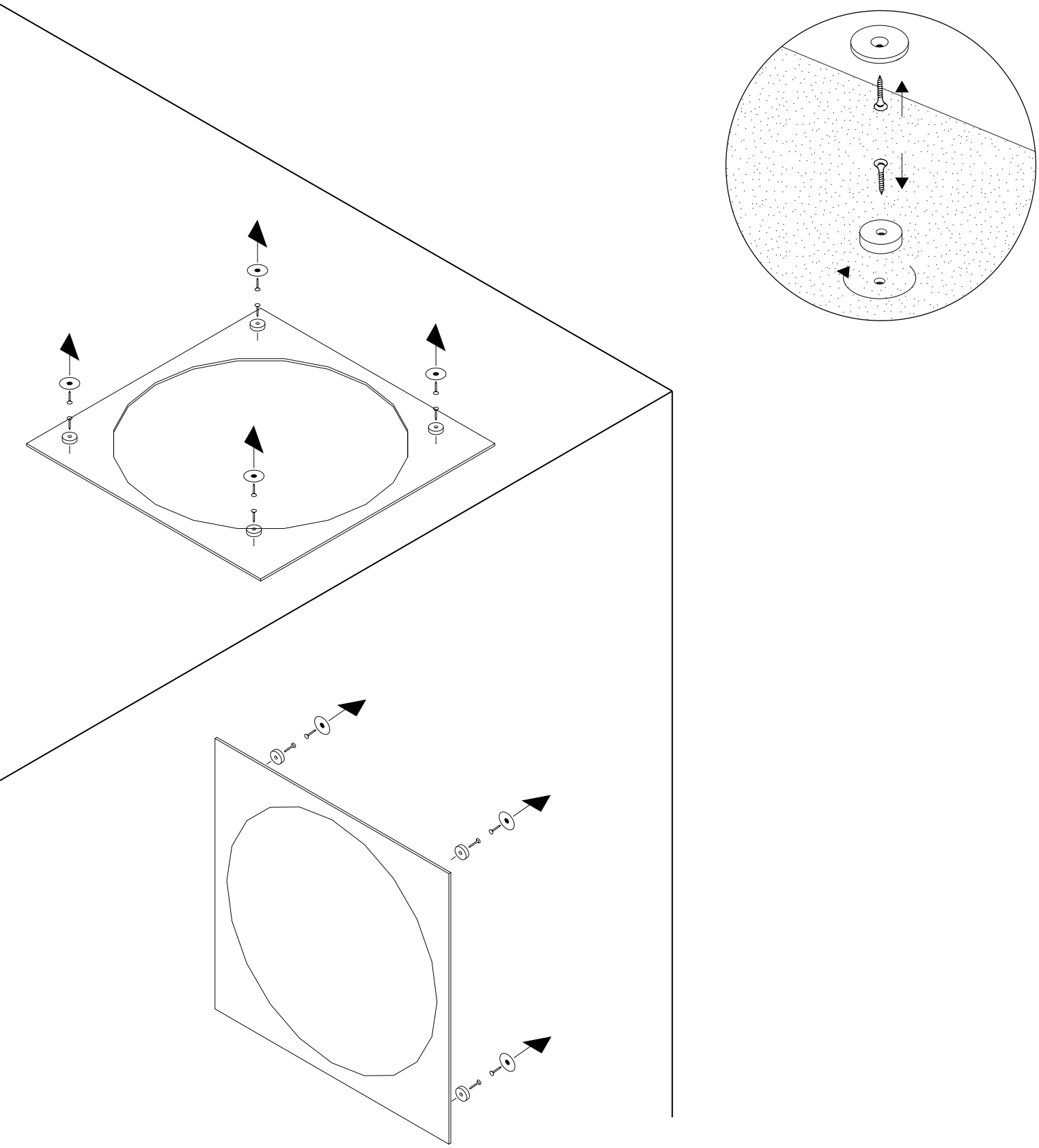

slalom
acoustic & partition systems
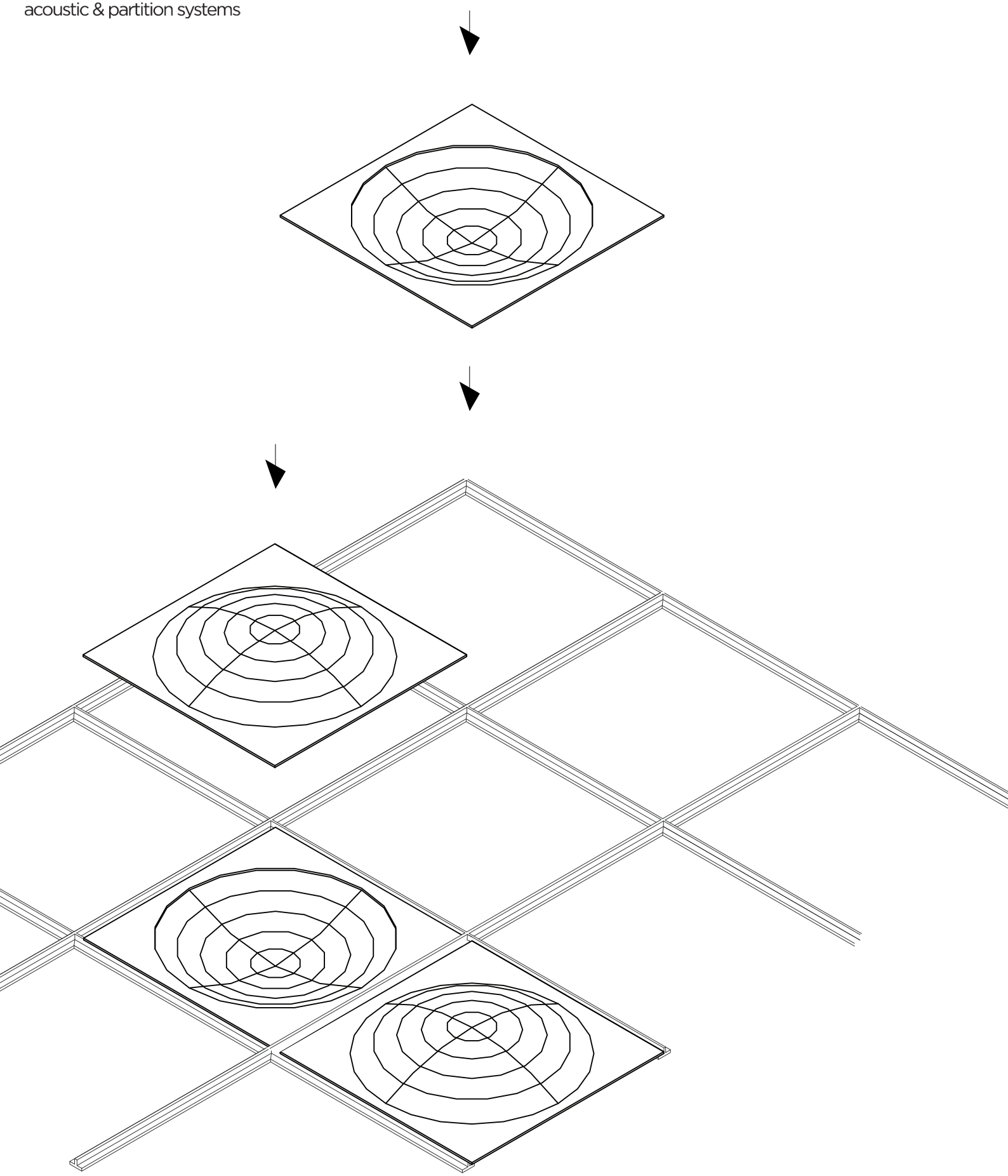
ECOround